MARYLAND COOPERATIVE EXTENSION
UNIVERSITY OF MARYLAND
COLLEGE PARK•EASTERN SHORE

Fact Sheet

Fact Sheet 808

Small Farm Composting using the Passively Aerated Windrow System

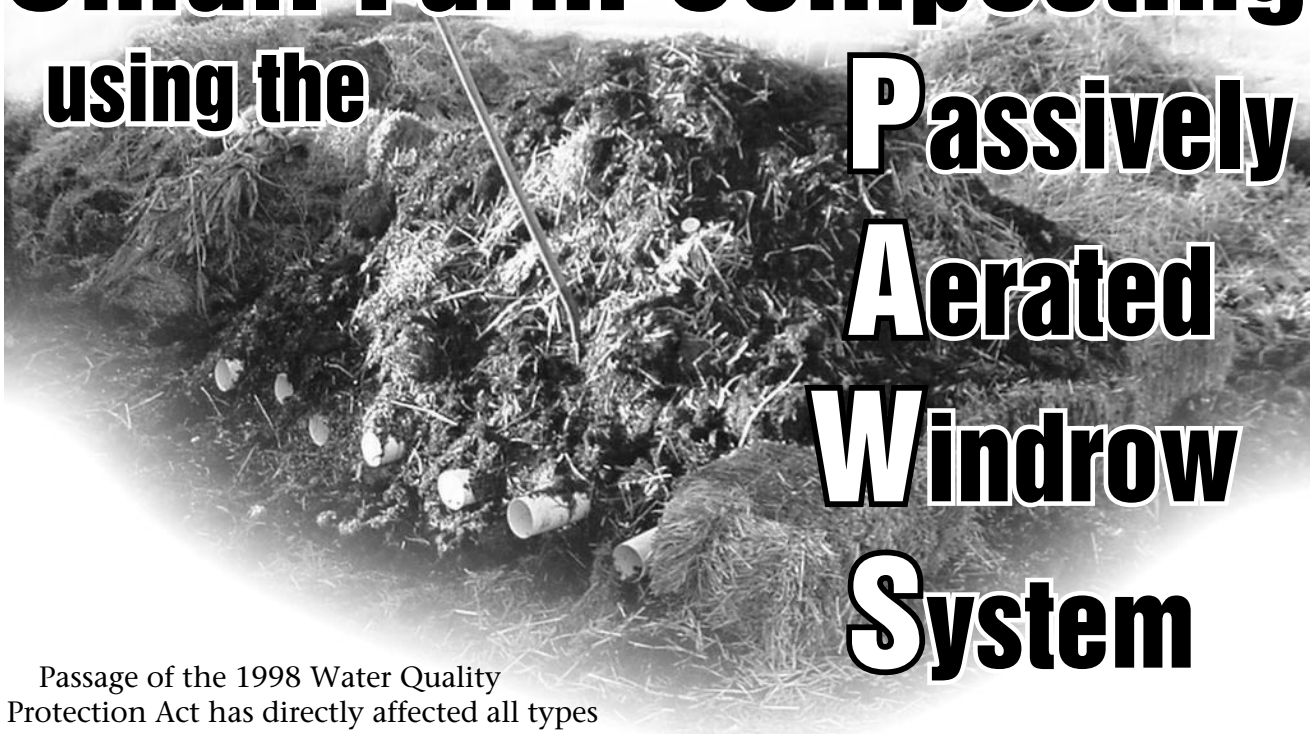

Passage of the 1998 Water Quality Protection Act has directly affected all types of agriculture in Maryland. Many small farms are now required to develop nutrient management plans similar to those developed for large-scale operations. Small-scale livestock farmers find it challenging to handle manure in a way that efficiently meets crop nutrient needs, while minimizing adverse effects on the environment. Some farms can only store a limited amount of manure. Other farms cannot financially justify investing in a spreader or the larger tractor needed to pull it and a load of heavy manure.

On-farm composting can help address these issues. Composting will reduce the volume of the manure, making it easier to store and reducing the amount to be spread. It will also convert the nutrients in the manure to more stable forms that will be less likely to move off-site and cause a runoff problem. In addition, compost provides nutrients in a slower release form while adding valuable organic matter to the soil. The organic matter provided by compost will improve the soil's water holding capacity and increase the availability of nutrients to plants. The high temperatures achieved during composting will reduce or eliminate possible problems caused by weed seeds or pathogens in the manure. This fact sheet describes the Passively Aerated Windrow System (PAWS) of composting. This method works particularly well on small farms with limited equipment.

Compost Basics

What is Compost?

Composting is the transformation of organic material (plant matter) through decomposition into a soil-like material called compost. Insects, earthworms, and microorganisms (bacteria and fungi) help to transform the material into compost.

Most on-farm composting operations take advantage of aerobic (requiring oxygen) microorganisms to do the job of decomposition. These microorganisms need certain environmental conditions in order to thrive and multiply. You are primarily managing these conditions when you manage the composting process. One important aspect of composting is the selection of kinds and amounts of materials to be part of the compost mix or recipe. It is that recipe that will set the starting environmental conditions for the composting process.

Conditions Required for Aerobic Composting

1. Carbon to Nitrogen Ratio

For rapid composting, the carbon to nitrogen ratio of the starting material should be between 20 to 30 parts of carbon per 1 part of nitrogen. This usually translates to about 2 to 3 parts C material to 1 part N on a volume basis. In some farm situations, such as on many horse farms, there can be much more carbon in the mix than there is nitrogen (C/N of 80-1). This type of condition will slow down the composting process and the microorganisms will not have enough nitrogen to produce needed materials for cell growth. Most stall waste (manure mixed with bedding) has a carbon to nitrogen ratio that is almost ideal for composting. One exception would be meticulously maintained horse stalls, where much more sawdust than manure is removed daily. Another would be barnyard waste that is 100 percent manure.

2. Adequate Oxygen

The microorganisms responsible for aerobic composting require oxygen. As they decompose the material in the pile, these microorganisms consume oxygen, depleting the amount available in the pile. If the amount of oxygen gets too low, the microorganisms die, and the composting process stops or become anaerobic. Anaerobic composting will produce odors and undesirable compounds like sulfides, ammonia, alcohols, methane, and aromatic hydrocarbons. Some of these compounds may be toxic to plants and should not be given an opportunity to form. Coarse material in the compost mix can improve aeration.

3. Proper Moisture

The material in the pile should be moist, but not dripping wet. Oxygen can't move within the pile if it is too wet and the pore spaces are filled. Dry conditions in the pile will kill the active microorganisms. It is also dangerous because the compost pile could catch on fire. It is often necessary to add water to a compost pile, especially during the summer. Optimum moisture content of compost is between 50 and 60 percent.

4. Proper Temperature

Optimum aerobic composting will occur between 110°F and 150°F. This range includes temperatures high enough to kill pathogens and most weed seeds, without killing the working microorganisms. Most compost piles

Figure 1. Compost pile temperatures over time. Adapted from a compost demonstration project by Benny Erez at Central Maryland Research and Education Center, University of Maryland.

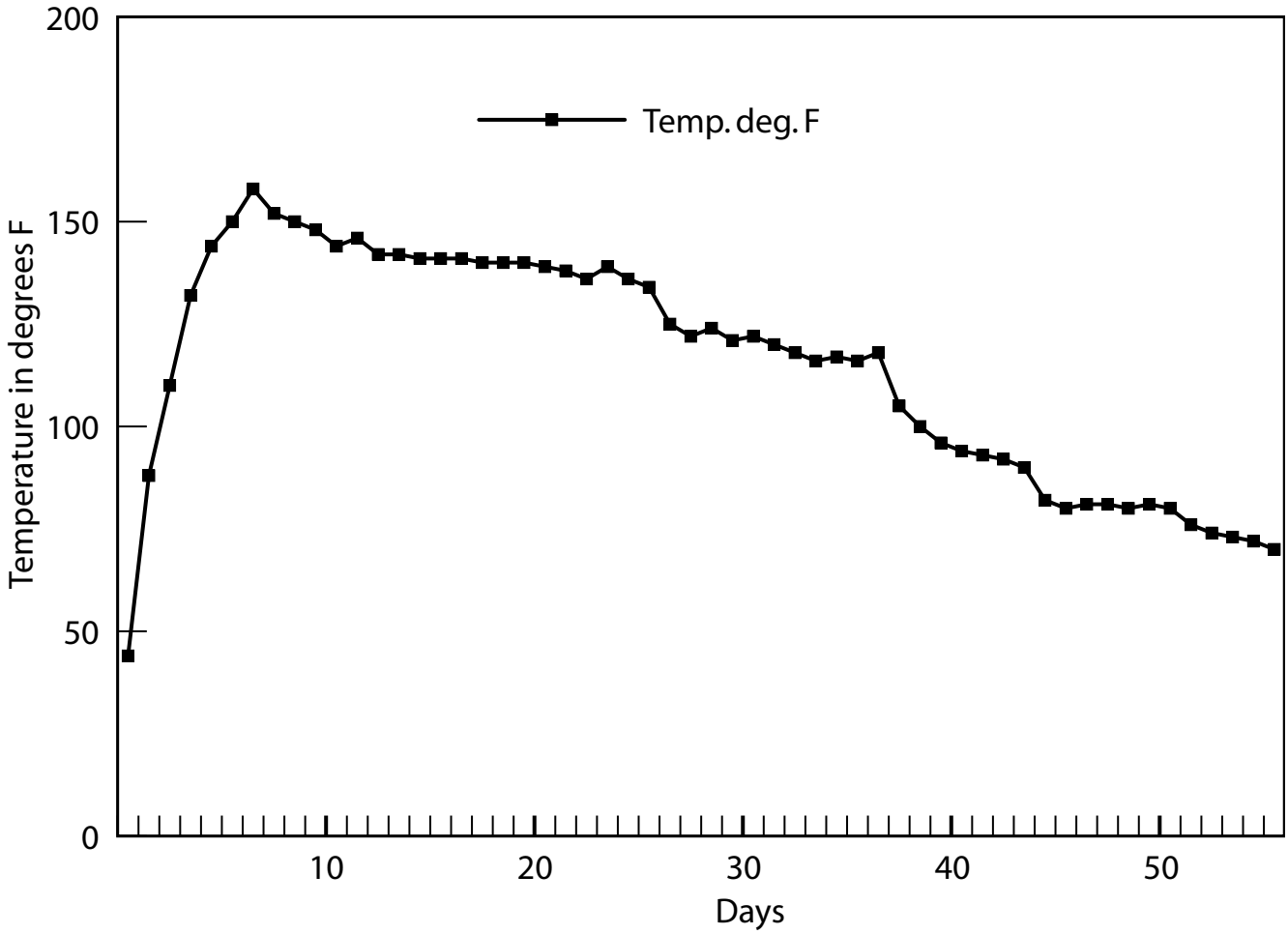

PAWS pile

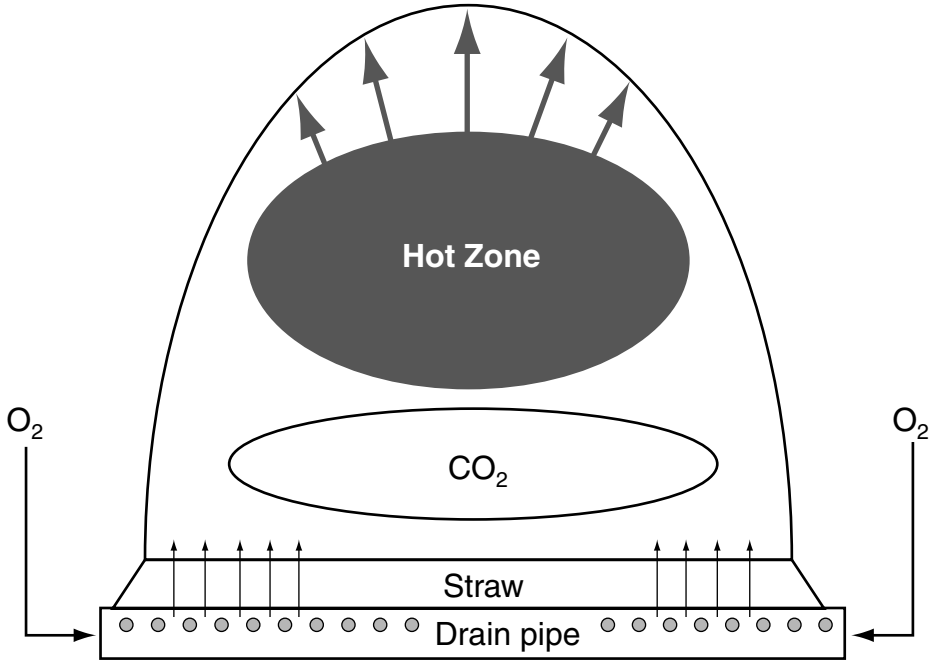

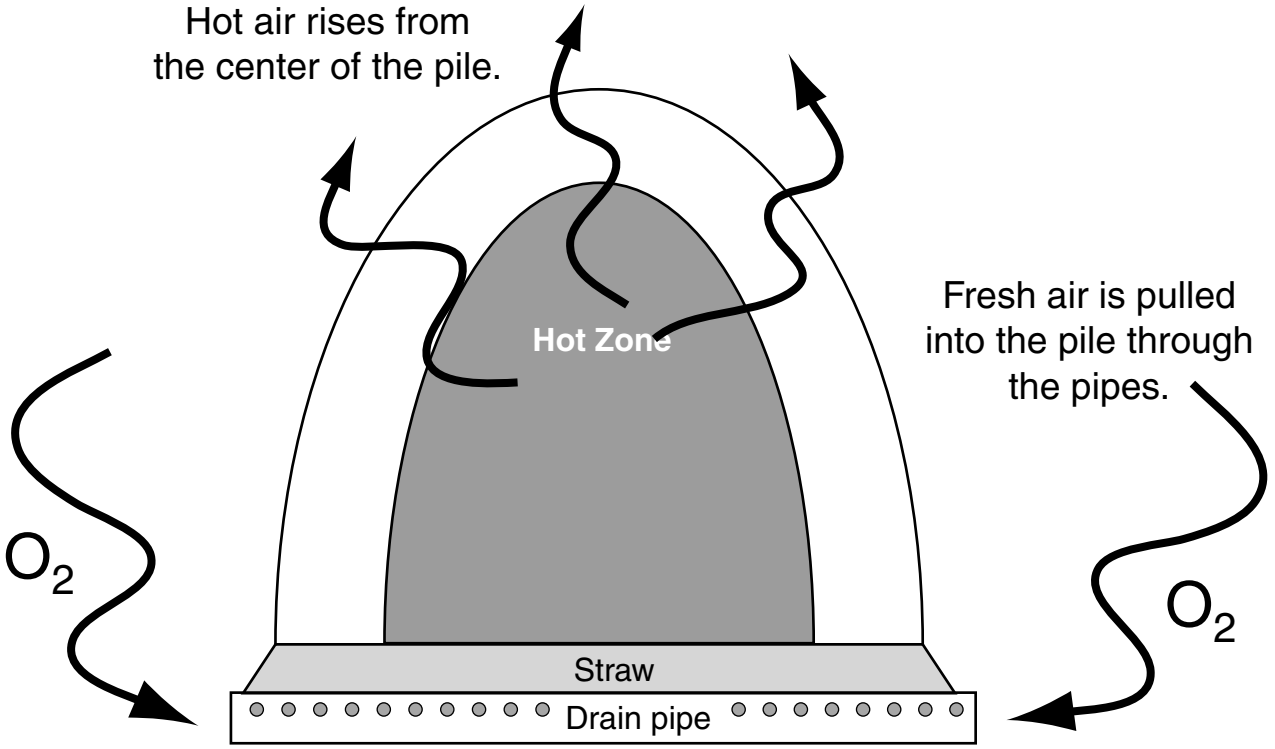

As the pile warms during the composting process, warm air rises out of the top. The PAWS pile has perforated pipes under the pile that serve as air inlets to pull air into the windrow as the warm air leaves the pile. PAWS is a very flexible system that can be used for anything from annual barn clean-outs to daily stall mucking.

start at a low temperature (50°F-110°F) and then increase to a higher temperature ranging from 135°F to 150°F (the thermophilic range). Compost temperature should not exceed 150°F because higher temperature will kill the beneficial microorganisms. Temperature between 135°F to 150°F should persist for several weeks and then should drop off to less than 113°F (the mesophilic range). The pile should stay in the mesophilic stage for some weeks until the end of composting where ambient temperature should be achieved. A truly mature compost should be always at ambient temperature. See Figure 1.

Passively Aerated Windrow System (PAWS)

Most composting methods require physical turning of the pile to assure homogenization and to maintain porosity for the microorganisms to thrive throughout the pile. Without aeration, the pile will go anaerobic (without oxygen), which slows the composting process and can lead to odor problems. Farmers with limited equipment usually cannot justify purchasing the equipment needed for mechanical aeration. The passively aerated windrow system (PAWS) is a simple, low-tech option for composting that appears to be particularly well suited for small-scale operations.

Making a PAWS Pile

1. Identify a good location for the pile. Do not select a site that is too low and wet, or one that is likely to intercept runoff. Contact your local Soil Conservation District for technical assistance. Also, contact your county zoning department about any restrictions on the location of compost piles.

2. Lay a bed of straw or waste hay approximately 6 to 8 inches deep. The bed should be about 12 feet wide and long enough to accommodate the amount of manure being composted at that time.

Passively Aerated Windrow System (PAWS)

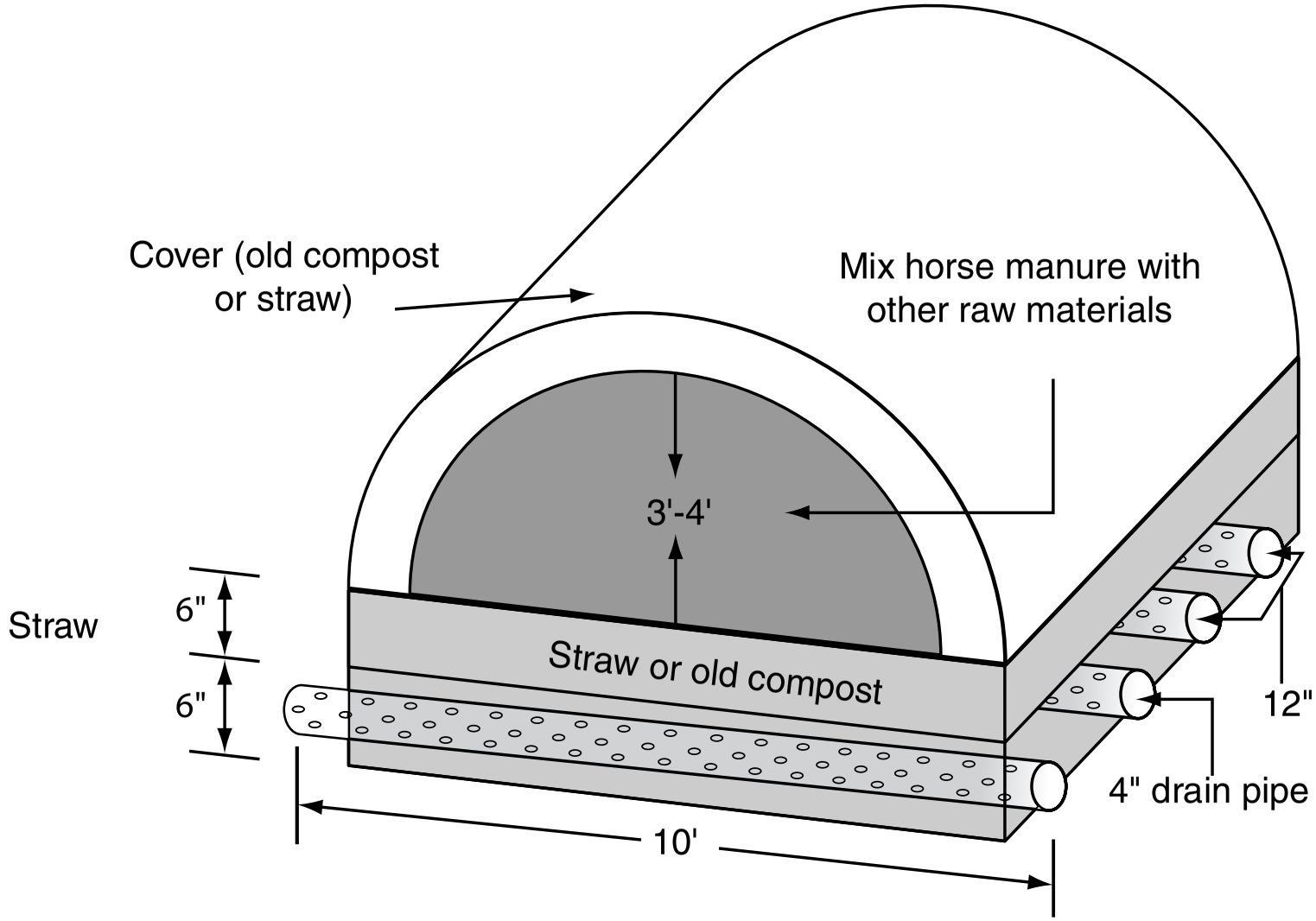

3. Next, lay four-inch diameter, perforated, 10-foot long PVC pipes on the bed of straw. The pipe used for septic drain fields appears to work quite well. The pipes come in 10-inch sections and have holes every 12 inches around half of the circumference of the pipe. The cost of the pipe is approximately .65 to .75 per foot. Place the pipes 12 inches apart on the bed of straw, with the holes pointing up. A more durable alternative would be schedule 40 pvc pipe, however drilling holes in the pipe would be necessary.

4. Mix the material to go into the pile. Be sure the manure is mixed well with bedding materials such as straw, wood chips, sawdust. Remember, the pile will not be mixed again. Waste hay may be added as a bulking agent that will maintain pore space. If the mix is packed too tightly, air will not be able to move through the pile, and the aerobic decomposition process will stop.

5. Pile the mixed manure on the bed of straw. The pile should be about 4 to 5 feet tall and 8 to 9 feet wide, with gently sloping sides. Be sure the ends of the pipes are uncovered so that air can move freely into the pipes. Additional material can be added to the ends of the pile, but not to the sides. As the pile lengthens, it becomes a windrow.

6. Cover the windrow with 6 to 12 inches of straw or 3 to 6 inches of finished compost to help retain moisture and provide insulation. Within 24 to 48 hours the internal temperature of the pile should rise to between 110°F and 140°F. The temperature should stay in this range for the duration of the composting process, which will take between 6 and 12 weeks depending on the composting materials in the pile and weather conditions. Cold or dry weather, in particular, can slow the composting process.

7. Monitor the PAWS pile for adequate temperature and moisture. Check the pile temperature in a variety of locations with a compost thermometer. If the pile becomes saturated with water from heavy rains, the temperature will drop. It may be necessary to take the pile apart and reassemble it with additional dry blended composting materials. Consider having a tarp available to cover the pile if heavy rainfalls are predicted. Temperatures may also drop if the pile is too dry. Again, it may be necessary to rebuild the pile in this case.

Composting does add an extra step between cleaning out the barn and applying manure to the field. And, it does take time to make high quality compost. But, there is no question that composting will increase the value of manure, which is already a valuable on-farm resource. The passively aerated windrow system needs very limited equipment, and so is manageable for small farms.

Small Farm Composting using the Passively Aerated Windrow System

by
Bryan R. Butler Sr.
Extension Educator
Carroll County

Caragh B. Fitzgerald
Extension Educator
Howard County

Issued in furtherance of Cooperative Extension work, acts of May 8 and June 30, 1914, in cooperation with the U.S. Department of Agriculture, University of Maryland, College Park, and local governments. Thomas A. Fretz, Director of Maryland Cooperative Extension, University of Maryland.

The University of Maryland is equal opportunity. The University's policies, programs, and activities are in conformance with pertinent Federal and State laws and regulations on nondiscrimination regarding race, color, religion, age, national origin, gender, sexual orientation, marital or parental status, or disability. Inquiries regarding compliance with Title VI of the Civil Rights Act of 1964, as amended; Title IX of the Educational Amendments; Section 504 of the Rehabilitation Act of 1973; and the Americans With Disabilities Act of 1990; or related legal requirements should be directed to the Director of Human Resources Management, Office of the Dean, College of Agriculture and Natural Resources, Symons Hall, College Park, MD 20742.

P2003