MARYLAND COOPERATIVE EXTENSION
UNIVERSITY OF MARYLAND
COLLEGE PARK•EASTERN SHORE

Fact Sheet

Fact Sheet 760

Extending the Production Season for Vegetables and Small Fruit

Overview

Stretching the production season of many fruit and vegetable crops has the potential to dramatically affect overall farm profitability. By applying some of the practices described in this fact sheet, you have the potential to increase and level off cash flow, hold onto produce markets, utilize labor over a longer season, and increase overall profitability. The basic philosophy behind each practice noted is to maintain optimum growing conditions over a longer season than that provided by nature. These methods are not intended to drastically modify or control climatic conditions in the field; they are intended to create a more favorable microclimate in which to grow high quality produce.

Season extension will undoubtedly increase production in normally lower production times of the year. However, it is very important to carefully weigh the economics of each method and to evaluate how well it fits needs and resources. The ability to market effectively will have a great impact on how well the aforementioned methods will work. The grower who brings a crop to market first gains an advantage that lasts well into the standard outdoor production season. This is especially true for direct marketers who capture a large share of the market for much of the main season by being the first with tomatoes on their stand.

Methods to extend the production season are used on a wide variety of crops. Many of the purchased materials are reused during a single season to allow double and, in some cases, even triple cropping in one field. Local growing methods, crop selection, choice of variety, soil conditions, and microclimate will have a profound effect on the results achieved by these techniques.

Location and Cultural Considerations

Season extension is dependent in part on location. Select a site with a southern exposure. Plant on higher ground on a slope to achieve good air drainage; cool air settles to the bottom of the slope at night. Frost protection is provided by the gentle movement of air over a crop on a slope and may mean the difference between a loss and an early yield. Avoid the top of a hill where wind exposure may be a problem. Also, avoid tall trees that cast a long shadow in the spring or fall when the sun is low in the sky. Utilize windbreaks to block cool winds.

A light-textured, dark-colored soil is preferred. Soils light in texture will drain water more quickly than heavier soils. Dark soils warm more quickly because they absorb more solar radiation (heat energy). Soils can be darkened by adding organic matter such as compost, green manure crops, or by using dark plastic mulch. Soils should be tested by a reliable lab prior to final site selection. Incorporate any lime or organic matter early in the year while preparing the soil so it will be available to the crop.

Irrigation is important to crop production so a water supply near the site is preferred. No heating or ventilating equipment is used in cold frames so a source of power is needed only for an irrigation pump or any irrigation controls. If power is available, some automatic controls for venting or watering may be utilized.

Cultural practices can improve success. Raised beds improve water drainage and soil heating. Cover crops such as rye serve as low, temporary windbreaks and add organic matter to the soil when tilled under later. Variety selection is very important. Use cultivars with short season maturity or a tolerance of cooler or warmer temperatures.

Purposes of Season Extenders

I. Fit the needs of a management strategy by:

a. Providing some frost protection.
b. Creating a favorable microclimate.
c. Reducing evaporation of soil moisture.
d. Reducing disease pressure.
e. Being one part of an insect control strategy.

II. Be economically viable.

Season extenders fit the needs of a management strategy by trapping heat energy to provide some frost protection. The season extender provides wind protection for the crop and captures heat energy; together these create a favorable microclimate for plant growth. An additional benefit is a reduction in the evaporation of soil moisture, thus conserving that natural resource to aid plant growth. Disease pressure is reduced in situations where the foliage is kept dry. Insect and disease control is enhanced by the exclusion of insects from the crop under a season extender.

Season extenders make some early and late crops economically viable. Market prices are more favorable when the crop is in lower supply.

Types of Season Extenders

The cultural practices discussed above help to extend the growing season, but additional temperature and weather protection are found in practices to be discussed. Season extenders include plastic mulches, floating row covers, low tunnels/slitted row covers, and high tunnels.

Mulches

Plastic mulches have been used in vegetable production systems since the 1960s. Applications for the plastic mulches and the colors of the plastic itself are constantly being evaluated. Plastic mulches directly impact the microclimate around the plant by modifying the solar radiation absorption (or reflectivity of the ground surface) and decreasing the soil water loss (Liakatas et al., 1986; Tanner, 1974).

The color of the mulch has a great deal to do with its ability to warm the soil underneath. For example, black mulch can increase soil temperature at a 2-inch depth by 5°F over bare soil, whereas clear plastic can increase the temperature by 8°–14°F. Blue and red plastic mulches have both been found to increase soil temperatures, even more than clear plastic, and still provide some weed control, although less than that provided by black plastic. Other mulch colors that show great promise are green, yellow, and reflective "metallic-silver" mulch. Work is also being done to improve paper mulches.

Floating Row Covers

Floating row covers are large sheets of very lightweight spunbonded polyester or spunbonded polypropylene that is placed over the crop like a blanket. The material resembles the inner facing used in sewing garments. The fabric-like material is made up of randomly arranged fibers that are bonded together with heat and pressure. The resulting material is porous and allows moisture, air, and light to pass through the cover for plant growth.

Floating row covers are usually applied to the field early in the season and are pushed up as the crop grows. They do not require any support other than the crop on which they are placed. They can be used in combination with plastic mulches to further enhance the microclimate for plants like tomatoes, peppers, and cucurbits.

However, floating row covers can do damage to crops like tomatoes and peppers by rubbing against the crop as the row covers undulate in the wind. When used alone, the floating row cover will only provide a few degrees of protection against frost or freezing temperatures. For this reason, some of the cooler season crops may benefit more from the row cover. Crops like carrots, beets, lettuce, spinach, and even potatoes can take great advantage of those few degrees at night and the overall warmer temperature in the day to produce a crop 10 to 14 days earlier than by regular production methods. Covers must be managed carefully; they may need to be pulled off in midday to prevent temperatures from

getting too hot (above 95°F) under the cover and then reapplied in the afternoon to provide nighttime protection. When covers remain in place during moderate temperatures (80° to 90°F), the covers provide a physical barrier to insect and wildlife pests.

Floating row covers will also extend the growing season further into the fall. As night temperatures drop, so does the production of many vegetable crops. Floating row covers can be applied to crops like tomatoes, peppers, eggplant, squash, and cucumbers. Provide support for the row cover to prevent damage to the plant from rubbing by placing metal hoops every 8-12 inches in the row. Overwintering certain crops like lettuce, mache, scallions, and parsley is another use. For overwintering, a heavier weight floating row cover is desired (1.5 or 3.0 oz/yd^2), but due to the variability of winter weather in western and central Maryland, results may vary. For this reason a grower is well advised to start on a small scale and gradually increase the use of floating row covers once the management, marketing, and economics are clearly understood.

Low Tunnels or Slitted Row Covers

Low tunnels cover individual crop rows with a poly cover supported by wire hoops stuck into the ground. The hoops are usually constructed from galvanized number 9 wire which is used to support a 1.1 mil polyethylene cover. The length of the wire is usually 70 to 80 inches. When bent to form a hoop over the crop row, the wire makes a tunnel that is about 18 inches tall. Tunnel height of up to 30 inches can be used with crops that develop large, vegetative canopies early in the spring, i.e., summer squash. The poly covering is then placed over the hoops to create the low tunnel. These tunnels are most often used in combination with plastic mulch which will control weeds and help to warm the soil. The tunnels are installed after the crop has been transplanted in the rows and are usually left in place for 3 to 6 weeks. Low tunnels provide the most benefit to crop growth in the early part of the season. Significant gains in early production can be realized with these tunnels if they are carefully managed, and if the spring is particularly cool and cloudy.

One of the major management concerns is the difficulty of ventilating the tunnels. To allow some ventilation, many manufacturers also make a 1.1 mil poly that is slitted. The slits allow a certain amount of natural ventilation to occur. This helps to regulate the temperature and humidity on sunny days when the heat inside the low tunnel can get high enough to damage the crop. If nonslitted plastic is used, the cover must be removed or cut to provide adequate ventilation to reduce high temperature and humidity. Manual slitting of the cover can take a great deal of time and be quite costly if the poly is ruined. The fact that the sides of these tunnels are secured by covering them with soil adds to the difficulty of uncovering the plants. Soil on the edges of the cover helps to prevent air leakage on cold nights and holds the nonporous poly in place during high winds in the spring.

Low tunnels are best suited for tomatoes, peppers, melons, and cucumbers. They must be intensively managed and a maximum/minimum thermometer is almost essential for monitoring the temperature changes in the tunnel.

High Tunnels

A high tunnel is similar to a greenhouse structure that may be the most versatile of all the season extenders. High tunnels offer the opportunity for the grower to get a crop in early in the season, to stay in production later in the season, and, possibly to produce a crop such as greens through the winter. In Maryland, the seasons vary greatly from one year to the next, so it is difficult to confirm exactly what the crop possibilities are. However, with good planning, variety selection, and close management, this low-cost system can add another dimension to a vegetable or small fruit operation.

In a high tunnel system, the tunnel is large enough for the grower to plant, monitor, or harvest the crop from inside the structure. The standard tunnel is 14 feet wide, 96 feet long, and 7 feet 6 inches tall at the center. (Figure 1.) Tunnels are 20 feet wide or less, for good cross ventilation and reduction of snow accumulation on the roof in the winter. The quonset frame consists of metal bows made by bending steel pipe or tubing. Potential stresses caused by the

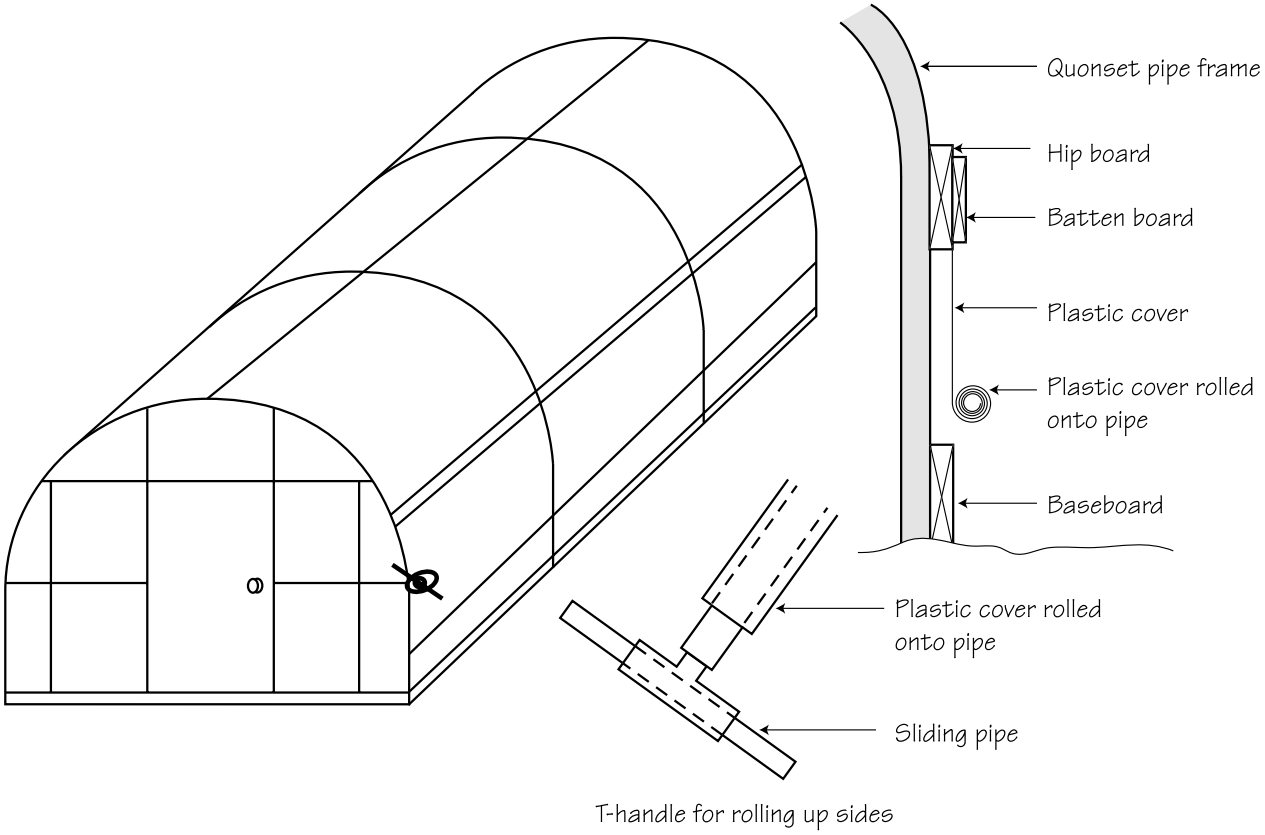

Figure 1. Typical high tunnel (cold frame) with roll-up sides using a T-handle on a pipe.

weight of snow or heavy wind must be considered. Metal pipes, which are driven into the ground approximately 2 feet deep and every 4 feet of the high tunnel length, provide support for the quonset frame. The bows fit into the ground pipes and are attached by bolts. The ends of the structure can be plastic or wood on a wood stud frame, but should be removable to allow access for tillage equipment and to increase ventilation in the summer. The structure is typically covered with a single layer of 6 mil polyethylene with provisions for rolling up the sidewalls. The poly is secured onto a batten board on each side of the high tunnel about 3.5 feet above the soil line. A vertical sidewall helps to keep rain out of the tunnel and when rolled up, provides ventilation. A pipe is then attached to the loose bottom end of the plastic along the length of the structure. A "T" handle on the end of the pipe is used to roll the plastic onto the pipe to open the sides. Cross ventilation is assisted by wind and has proved to be very efficient. The key to successful use of the high tunnel is to spend the time laying out and preparing the site for construction. The better the tunnel is constructed, the easier the roll-up sides will work and the easier it will be to ventilate.

Crops are grown directly in the soil inside the high tunnel and productivity can be maintained into or beyond the conventional growing season as long as the side vents are carefully managed.

During periods of cold weather the sides are lowered in the afternoon to hold heat and then raised in the morning to vent before temperatures inside get too high. The floor of the structure is covered with a layer of 6 mil black plastic. This helps to raise the temperature inside the house, to control weeds, and to prevent evaporation of soil moisture. Excess moisture will raise humidity in the tunnel and may lead to disease problems. Humidity of the air will increase at night as the air cools down. Venting in the morning will allow this moist air to escape. High tunnels can actually reduce the incidence of some diseases, particularly if trickle-irrigation tubing is used underneath the black plastic mulch. No water (rain or irrigation) gets onto the foliage to encourage disease development.

Potential Problems

Disease problems may occur in the protected environment; management of the environment is critical. Ventilation to avoid high temperatures or high humidity is very important. Maryland's unpredictable weather in spring and fall will make management important.

Insects will find the microclimate created for the plants to be favorable to their growth also. Without a doubt, integrated pest management (IPM) scouting must begin when the plants are set out. However, season extenders can actually be used as physical barriers to keep insects off the plants. For example, floating row covers that have the edges secured by soil will prevent many insects from reaching the crop.

Pollination of Crops Using Season Extension Strategies

Pollination is only a factor in flowering plant production such as tomatoes, peppers, cucumbers, and melons.

Generally, only greenhouse-specific varieties are utilized in high tunnel production. In most cases the air moving through a high tunnel will provide adequate pollination for tomatoes and peppers; however, bees are required for pollination of cucumbers and melons. To improve pollination of tomatoes and peppers, bumblebees or air blowers can be used, depending on the crop. While bumblebee colonies are fairly expensive, they can provide excellent pollination under favorable conditions. A pesticide program must accommodate the needs of the bees. Gynoecious cucumber cultivars do not require pollination. Generally, bumblebees pollinate strawberries and tomatoes grown in heated greenhouses. Wind pollination is sufficient in high tunnels with roll-up sides; however, it can be improved by using bees. Greens and herbs require no pollination, making them much easier crops to manage in a completely indoor environment, especially in the off season.

Summary

Season extenders can lengthen the growing season by creating a favorable microclimate around fruit and vegetable crops, providing some frost protection, reducing moisture loss, and providing some pest management opportunities. Mulches, floating row covers, low tunnels or slitted row covers, and high tunnels are systems used to enhance the growing season. Marketing and growing location selection are also important considerations in the use of season extenders.

References

Marr, C. W., and W. Lamont, Jr. *Commercial Vegetable Production—Plastic Mulches for Vegetables*. Kansas State University Cooperative Extension Service.

Storlie, C., and S. A. Garrison. 1994. "Evaluation of High Tunnel, Row Cover, and Thermal Tube Growing Systems for Early Tomato Production." Presented at the 1994 International ASAE Winter Meeting. ASAE Paper 94-4581.

Wells, O. S. 1991. *High Tunnels for Tomato Production*. Fact Sheet. University of New Hampshire.

Wells, O. S. 1996. "Row Cover and High Tunnel Growing Systems in the United States." *Hort Technology* 6 (3): 172 - 176.

Extending the Production Season for Vegetables and Small Fruit

by
Bryan R. Butler, Sr.
faculty Extension educator
Commercial Horticulture

David S. Ross
Extension agricultural engineer
Biological Resources Engineering Department

Issued in furtherance of Cooperative Extension work, acts of May 8 and June 30, 1914, in cooperation with the U.S. Department of Agriculture, University of Maryland, College Park, and local governments. Bruce Gardner, Interim Director of Maryland Cooperative Extension, University of Maryland.

The University of Maryland is equal opportunity. The University's policies, programs, and activities are in conformance with pertinent Federal and State laws and regulations on nondiscrimination regarding race, color, religion, age, national origin, gender, sexual orientation, marital or parental status, or disability. Inquiries regarding compliance with Title VI of the Civil Rights Act of 1964, as amended; Title IX of the Educational Amendments; Section 504 of the Rehabilitation Act of 1973; and the Americans With Disabilities Act of 1990; or related legal requirements should be directed to the Director of Human Resources Management, Office of the Dean, College of Agriculture and Natural Resources, Symons Hall, College Park, MD 20742.

P99