MARYLAND COOPERATIVE EXTENSION
UNIVERSITY OF MARYLAND
COLLEGE PARK•EASTERN SHORE

Fact Sheet

Fact Sheet 690

Greenhouse Float Systems for Transplant Production

David S. Ross
Extension agricultural engineer
Department of Agricultural Engineering

K. Marc Teffeau
regional Extension commercial horticulture specialist
Wye Research and Education Center

Introduction

Greenhouse float systems were originally developed in the southern tobacco-growing states for tobacco transplant production but are now being used for vegetable transplants, also. Interest in this type of system is spreading because direct-seeded flats placed into a greenhouse float system do not require additional handling until the plants are removed for field planting. A greenhouse float system constructed at the Wye Research and Education Center is being used to evaluate the feasibility of this type of system for vegetable, bedding, herb, and perennial transplant production.

A greenhouse float system uses Styrofoam flats or trays that float on shallow water–filled bays (called water or wet beds) on the floor of a greenhouse. The wet beds are lined with black film plastic and filled with 4 to 5 inches of water. The cells in the flats are filled with a moist growing media. A small opening approximately a quarter of an inch in diameter in the bottom of each cell allows water carrying nutrients to wick up into the cell. The new seedlings grow to transplant size in about 8 weeks, at which time the flats are removed from the wet beds.

Direct seeding offers a labor savings. Seeding machines are available to automate that task. Tobacco production requires a clipping process, which removes about one-half of an inch of top growth from the plant and helps to produce a better quality tobacco transplant. Vegetable plants do not require clipping.

This fact sheet outlines the steps necessary to construct a greenhouse float system and the requirements for producing transplants with this system.

Site Preparation

A float system must be constructed on a level site, an important part of the manufacturer's instructions for site preparation and greenhouse erection. A vertical difference of 1 inch from one end of the greenhouse to the other is acceptable. Site preparation is stressed because a 1-inch elevation change in 100 feet is uncommon in building most greenhouses. Include the installation of utilities and the foundation when planning the grading and filling of the site. The site should have easy access to electricity and water, and adequate roadway access.

Level a site 10 feet wider and longer than the planned greenhouse so there is plenty of room to work around the greenhouse. To ensure good drainage, grade the site to make it several inches (4 to 6 inches) above the surrounding land or use gravel to raise the grade of the site. Place drain tiles under the site if it is an unusually wet area. (Moist soil under the greenhouse will conduct heat away from the wet beds.) Use 1 to 2 inches of sand for the final grading if the surface material is rough. Sand helps prevent rocks and small roots from puncturing the black film plastic in the float beds.

Lay out the corners of the greenhouse carefully to the correct dimensions, keeping the corners square. Use a transit to set ground stakes or strings to the same height. The foundation pipes must be in line, at the required height, and at the required spacing, as outlined in the manufacturer's specifications.

Greenhouse Structure

The typical greenhouse has a double layer of film plastic over a Quonset-shaped, steel-pipe frame. The end walls are framed with vertical 4- by 4-inch posts and horizontal 2- by 4-inch lumber covered with film plastic or, on the north side, with plywood or some other opaque material.

Use a small fan to inflate the space between the two layers of film plastic on the roof. Because moisture reduces the amount of light able to enter the greenhouse, inflate the space between the plastic layers with the cooler, dryer outside air rather than the warm, moist inside air, which can cause condensation. The two layers of film plastic with air separation provide insulation and roughly 30-percent energy savings over a single layer of film plastic.

Issued in furtherance of Cooperative Extension work, acts of May 8 and June 30,1914, in cooperation with the U.S. Department of Agriculture, University of Maryland at College Park, and local governments. Thomas A. Fretz, Director of Cooperative Extension Service, University of Maryland at College Park.

The University of Maryland is equal opportunity. The University's policies, programs, and activities are in conformance with pertinent Federal and State laws and regulations on nondiscrimination regarding race, color, religion, age, national origin, sex, and disability. Inquiries regarding compliance with Title VI of the Civil Rights Act of 1964, as amended; Title IX of the Educational Amendments; Section 504 of the Rehabilitation Act of 1973; and the Americans With Disabilities Act of 1990; or related legal requirements should be directed to the Director of Personnel/Human Relations, Office of the Dean, College of Agriculture and Natural Resources, Symons Hall, College Park, MD 20742.

The Quonset hoops can go directly into the ground or there can be short sidewalls. Pipes set into the ground serve as the foundation and anchor the building against wind. Sidewalls permit the installation of rollup devices so the sides can be opened for ventilation. This manual system is useful in the spring for continuous ventilation during the day.

Environmental Control System

Proper temperature and humidity conditions are required in a greenhouse for good germination and growth of transplants. These conditions are best controlled with an automatic environmental control system in the greenhouse. Because winter's lowest temperatures may occur during the transplant production season and high temperatures may occur in early spring, the equipment needed for an environmental control system should be sized for year-round conditions. Do not take short cuts on the environmental equipment.

Heating and Air Circulation

Germination requires warm temperatures. Size the heating system to maintain a 60 or 65 °F night temperature on a 0 °F night. As stated previously, a double-covered, inflated film plastic roof requires only 70 percent as much heat as a single film plastic cover.

When the greenhouse needs to be heated, the air should circulate continuously to maintain a uniform temperature in the greenhouse. Small horizontal airflow (HAF) fans provide this circulation. The HAF fans' air capacities should total 2 to 3 cubic feet per minute (ft^3/min) per square foot of greenhouse floor area. A typical 30-foot by 96-foot greenhouse (2,880 square feet) uses four HAF fans, each rated at 25 percent of its total capacity. In this example, the total HAF capacity of the four fans should be between 5,760 and 8,640 ft^3/min. Each fan's capacity should be between 1440 and 2160 ft^3/min. Hang the fans in such a way as to create circular air movement above the plants.

Summer Ventilation

The greenhouse may come with a manual rollup sidevent system. The film plastic on the sides can be attached to the vent mechanism and rolled up during warm weather, allowing natural airflow ventilation to occur as the wind moves air in one side of the house, across the greenhouse, and out the other side. The system works best in warm weather where temperatures outside are stable and there is a gentle breeze. Unfortunately, the system is not automated. An automated ventilation system is a valuable temperature-management tool.

During the warm season, the greenhouse ventilation system should change the greenhouse air at the rate of one air change per minute. In general, a greenhouse ventilation system should provide an air change of 8 ft^3/min for each square foot of floor area. To estimate the greenhouse air volume, multiply the length and width, in feet, of the greenhouse by 8. Size the fans (two are suggested) to move that volume each minute. For example, for a 30- by 96-foot greenhouse, the total ventilation rate would be 23,040 ft^3/min (30 x 96 x 8), and each fan should have a capacity of 11,520 ft3/min. Select a fan with the desired airflow at 0.125 inch water static pressure. Some exhaust fan/hood designs are more efficient, and exhaust fans can be selected at 0.1 inch water static pressure.

Winter Ventilation

A two-exhaust-fan system, one of which should be a two-speed fan, is recommended for greenhouses used through the winter or early in the growing season. Because the low speed of the two-speed fan is about 70 percent of its full speed, the low speed gives a suitable winter ventilation rate of 35 percent of the total capacity. In warm weather, one full-speed fan (50 percent of total capacity) or two full-speed fans (100 percent of total capacity) are used.

Ventilation in the winter removes excessive moisture and replenishes carbon dioxide to the plants for photosynthesis. A low ventilation rate allows adequate air mixing to avoid chilling the plants. Excess moisture is removed by exhausting warm moist air to the outdoors and heating the incoming air. Cold outside air is drier and can pick up moisture when heated. Efficient heating is important, but maintaining a proper environment is essential for good plant health.

Automatic controls, thermostats, or a central controller is recommended to operate the heating and ventilating system in the greenhouse. Manual control is difficult on days when the solar input varies because intermittent clouds block the sun. Place environmental controls near the center walkway about one-third of the way in from the end of the house. Never mount the temperature sensors on the walls of the greenhouse. Extension Bulletin 351 "Greenhouse Heating, Circulation, and Ventilation Systems" provides more indepth information on selecting, installing, and operating a greenhouse environmental control system.

Floor Float System

Media-filled Styrofoam flats that float on 4 to 5 inches of water in a wet bed are used to germinate seed and to grow the transplants to field size in the floor float system. Wet beds are formed by dividing the floor inside the greenhouse using boards the same height as the side boards. Leave a center walkway 24 inches wide. Create water beds using black film plastic laid over the ground and framing boards. Attach the film plastic to the top of the framing boards with batten tape and staples (Figures 1 and 2). Do not fasten the film plastic tightly until water has been added, otherwise the film plastic may pull loose.

An optional water circulator system made of 1/2-inch and 3/4-inch PVC pipe is suggested to create a water circulation pattern in the bed. The piping system is laid on the plastic liner covering the floor, and a sump pump moves the water. The greenhouse manufacturer may suggest a specific pattern for the pipe in the circulation system. Fertilizer can be injected into the water and distributed by this water circulator system (Figure 3).

Fill the water beds 3 to 4 days before seeding to allow sunlight to warm the water. Fill the germination flats

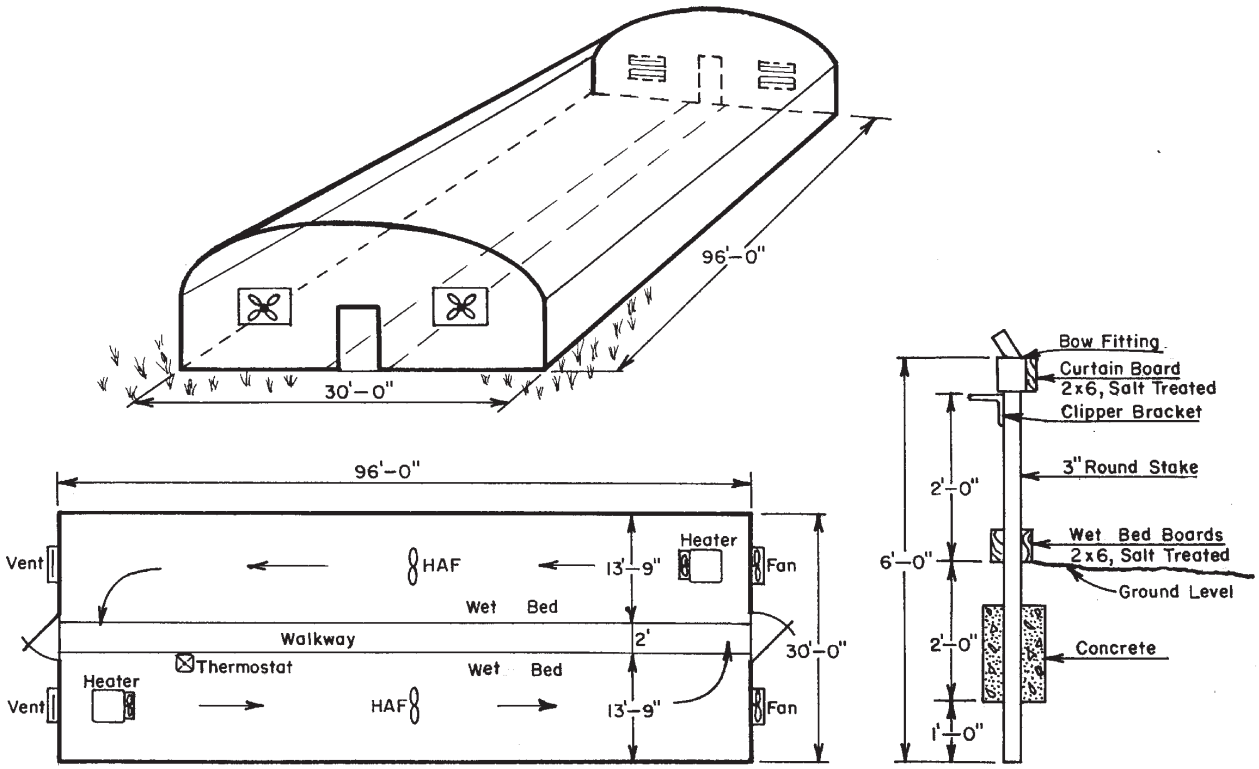

Figure 1. A floor float system with two wet beds and a center walkway. The boards for the wet beds and the clipper bracket attach to the sidewall post.

completely and firmly with a moist media of approximately 50 percent peat and 50 percent vermiculite to allow good wicking of water, which is critical for successful germination and growth. Dibbling of the cells with a dibble board ensures good seed-to-media contact and quick germination. The Styrofoam trays float on the water, and holes in the bottom of each cell allow water and nutrients to wick up into the soil media as needed.

Maintain air temperatures in the greenhouse around 72 °F at tray level during the first 3 weeks. (This is usually 85 to 90 °F at eye level but will vary depending on the air circulation system.) Air temperatures should not exceed 95 °F, as this will result in reduced growth of the transplants, especially during the early stages of growing. In the greenhouse, high temperatures are generally more of a concern than low temperatures. A continuous air circulation system reduces the temperature differential. A ventilation system will prevent high temperatures. Heating the water has been considered, but the Styrofoam flat prevents fast upward movement of heat and little heat reaches the growing media and root system.

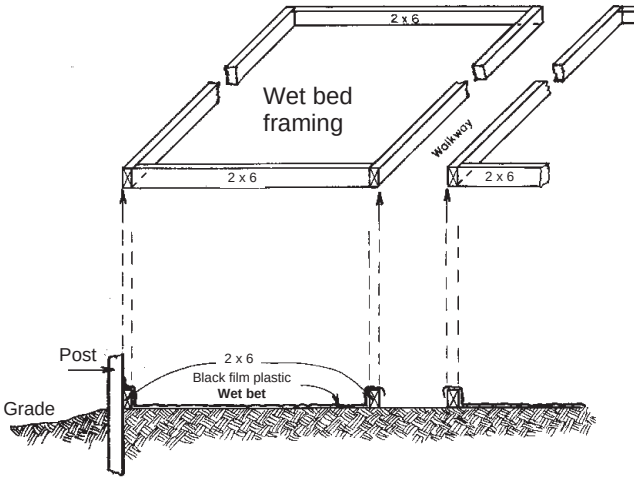

Figure 2. The wet beds are constructed with 2- by 6-inch salt-treated boards covered by a black film plastic liner.

Clipping System

A clipping system is part of the equipment available with the float system and a major component used in the production of tobacco transplants. It has not had much use in the production of vegetable transplants. For tobacco, the clipper or lawn-mower device cuts the tops of the transplants off to give plant uniformity, increase plant quality, reduce premature flowering, and ease transplanting. The plug-and-transfer system requires clipping two or three times, beginning when the plants are 3 inches tall. The direct-seed system requires clipping five to seven times, beginning at the 2- to 3-inch height. Each clipping should remove only one-half of an inch of tobacco foliage.

Guide rails for the clipping system mount onto the foundation pipes along the length of the greenhouse. A boom assembly the width of the greenhouse rides on the side rails. The mower and operator ride on a carriage

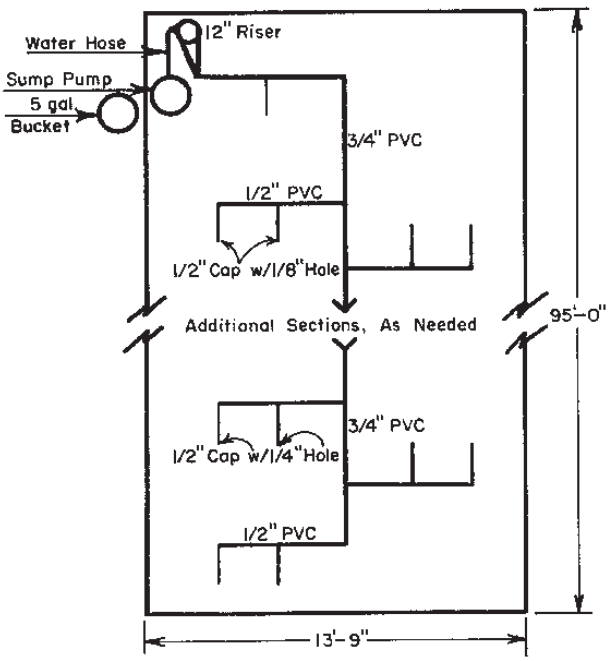

Figure 3. An optional water circulator system distributes the water and nutrient solution in the wet bed.

mounted onto the boom assembly. The carriage can move side to side while the boom assembly moves lengthwise in the house. A rotary lawn mower mounted on the carriage does the cutting.

Fertilization

Transplant production requires the use of a high-quality, water-soluble fertilizer. For tobacco and vegetables, use 20-20-20, 20-10-20, or ammonia nitrate. Usually, a total of 200 to 250 parts per million (ppm) of nitrogen in the float beds is adequate when fertilizer is mixed in the water bed. Five equal applications are recommended over a 10-week period. Always maintain a minimum 4-inch water level in the bed. Research at North Carolina State University and at Virginia Tech recommends applying 150 ppm of nitrogen from 20-20-20 or 20-10-20 fertilizer (9.9 ounces of either fertilizer per 100 gallons of water) in the water bed before the trays are floated. About 4 weeks after floating, additional water should be added along with an additional 100 ppm of nitrogen (6.6 ounces of either fertilizer per 100 gallons of water). To estimate the quantity of water in gallons needed to fill each water bed, multiply the length (in feet) of the bed by its width (in feet) by its depth (in feet) by 7.48 gallons per cubic feet.

Magnesium sulfate or calcium sulfate can be added (6.6 ounces of Epsom salts per 100 gallons of water) if magnesium, calcium, or sulfur deficiencies are observed. (Sulfur deficiencies are not common in transplants.)

Test irrigation water before production begins. Testing is available for a reasonable fee from commercial testing laboratories. Well water is the preferred water source for greenhouse operations. Water from streams or irrigation ponds should not be used unless a water treatment system is installed to kill any potential soil–borne disease pathogens that may infect greenhouse plants.

In plug-and-transfer systems, supplemental fertilizer adds nitrogen to the water to replace that used from the media. If plants become yellow, add ammonium nitrate directly to the water at a rate that supplies 50 to 75 ppm of nitrogen (2 ounces of ammonium nitrate per 100 gallons of water to provide 50 ppm of nitrogen).

Sanitation

Throughout the growing of transplants in the float system, promptly remove any diseased plants. After the crop is transplanted, allow water remaining in the beds to evaporate. Then disinfect by washing down the greenhouse and floor bed using a 50–gallon mixture of 5 gallons of a 5.25-percent chlorine solution (such as laundry bleach) in 45 gallons of water.

Soil-borne diseases that affect greenhouse plants are usually brought into the greenhouse from the outside. Styrofoam trays used in a float system must be cleaned of field soil and old growing media before being reused. Washing and dipping the trays in the 5.25-percent chlorine solution mentioned previously will sanitize the trays. Avoid placing the growing trays on the ground in the field during transplanting operations. When not is use, store the trays above ground and cover with plastic to avoid airborne contamination.

Outdoor Float Systems

An alternative to the greenhouse float system is the outdoor bed float system. This approach uses the same float system as in a greenhouse but in outdoor beds that are smaller and constructed of pressure-treated lumber and black plastic liners. This system has been tried in various southern states as a low-cost adaptation of the greenhouse float system. Provisions must be made for covering of the outdoor beds with clear plastic or fabric bed covers and heating during low temperatures. For tobacco production, a clipping system is also needed with an outdoor bed.

Summary

The float production system has gained popularity for starting tobacco and vegetable transplants because the plants are grown from seed to field ready without moving flats or using overhead watering, thus reducing the labor required. So far, research has indicated that this system produces high-quality plants.

The authors thank the people who reviewed this publication, including Mr. Wayne Argo of Southern States Cooperative, Inc.; Robert Rouse, regional Extension vegetables and fruits specialist, Wye Research and Education Center, College of Agriculture and Natural Resources, University of Maryland at College Park; and Jay Windsor of the Delaware Cooperative Extension Service.

P96