MARYLAND COOPERATIVE EXTENSION
UNIVERSITY OF MARYLAND
COLLEGE PARK•EASTERN SHORE
Publication

EB-254

Uniform Lime and Fertilizer Spreading

Decisions on lime and fertilizer must be based on the results of soil testing, plant analysis and other modern scientific tools. Also, farmers cannot afford to have lime and fertilizer dollars being wasted because of poor spreader distribution patterns. On most farms, the desired amount of fertilizer or liming material is probably being applied to each field; however, it is also likely that much of this material is not being spread uniformly over the field.

Uneven distribution of lime and fertilizer can reduce crop yields. Research conducted at Virginia Polytechnic Institute and State University indicates that when one area of the field is over-fertilized and another is under-fertilized, the total yield will be less than if the correct amount of fertilizer were spread evenly over the entire field. The reason for this result is the law of diminishing returns. That is, there is a decreasing return for each additional increment of applied fertilizer (See Figure 1). In attempting to obtain maximum yields, the last increment of fertilizer applied will increase the yield by a smaller amount than the previous increment. Therefore, a given unit of fertilizer on an under-fertilized part of the field will result in a much larger yield increase than the same unit of fertilizer applied to an over-fertilized portion of the field.

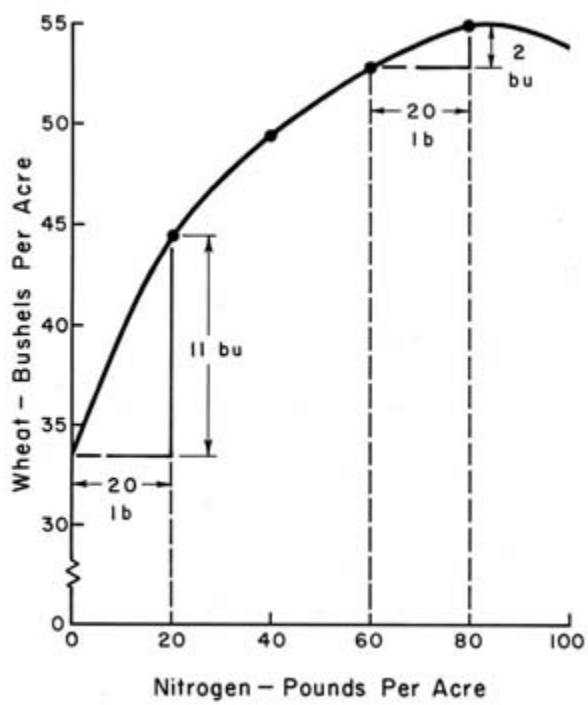

Figure 1. The response of Arthur Wheat (Poplar Hill Farm - 1973) to varying rates of nitrogen fertilizer.

The effects of variability in fertilizer distribution are most notable on soils of low to medium fertility. On soils of medium to high or very high fertility, the response to fertilizer is not as great and, therefore, detrimental effects due to uneven spreading are not as noticeable. However, on soils of low to medium fertility, the response to fertilizing and liming is larger, and the effects of uneven distribution are much more noticable. In the Virginia tests, two locations were utilized -- one of low fertility and one of high fertility. Several fertilizer distribution patterns were imposed upon these two soils, from an even distribution or uniform pattern to a widely variable, nonuniform pattern. On the low fertility soil, maximum yields of wheat occurred where the fertilizer had been spread uniformly.

In cases where the fertilizer had been applied in a skewed or nonuniform pattern, yields were reduced by 20% to 25% (see Figure 2). On the more fertile soil, yields were not obviously affected by the various spreader patterns since little or no response to fertilizer occurred. A similar response was obtained using corn as the test crop. The results of this research proved conclusively that nonuniform application of fertilizers resulted in less total yield than uniformly applied fertilizers even though the same total rate per acre had been applied in each case. The loss in yield due to lower than recommended rates of application far exceeded the slight increase in yield obtained from excess application over the recommended rate.

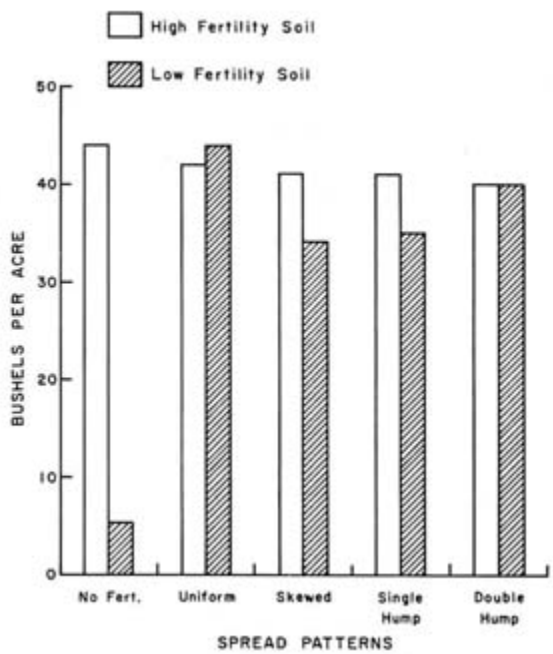

Figure 2. The effect of fertilizer spread patterns on the yield of wheat (VPI & SU, 1970).

Obviously, the effects of nonum'form plant food distribution on medium to high fertility soils will not be as apparent as on low to medium fertility soils. However, nonuniform soil fertility differences are likely to develop, particularly if similar nonuniform spreader patterns are followed year after year. Such continued poor practice will even make it difficult to obtain a good soil sample for fertility evaluation.

According to the 1975 University of Maryland Soil Test Summary, 47 percent of the fields tested in Maryland had a pH of 6.0 or lower. However, in some counties, as high as 72 percent of the samples tested had a pH of 6.0 or lower, indicating in some cases a great need for lime. It is on such low pH fields that the greatest amount of damage can occur due to nonuniform spreader distribution patterns.

Similarly, in some counties, as many as 53 percent of the phosphorus tests, 20 percent of the magnesium tests and 28 percent of the potash tests were low or very low. These fields will suffer the greatest yield reduction due to nonuniform spreading. On higher fertility soils, poor lime and fertilizer distribution apparently may result in smaller reductions in yield. But in many cases soils high' in phosphorus and

potassium can be seriously hurt if pH is too high. Soil pH that is too high results in reduced nutrient availability and subsequent plant nutrient deficiencies.

In the spring, evidence of spreading problems is often found on pastures which have been top-dressed with nitrogen. As the growing plant starts to turn green in the spring, fertilizer spreader patterns become obvious. Where uniform spreading jobs have been done, the field will be uniformly green. With nonuniform spreading, streaks of light and dark green will be visible due to the uneven rates of fertilizer application.

Spreading problems can occur with both lime and fertilizer materials on farm fields, as well as on home lawns and gardens and with all kinds of spreaders including spinner, boom and full-width type. Some problems are common to all types of applicators. For instance, applicators should be calibrated for each kind and rate of material applied. One fertilizer analysis may not spread as well at one setting as another would. As the spreader becomes older and parts become worn, recalibration may be required. Equipment operators, whether they are hired or whether they are spreading on their own fields, usually learn very quickly how to adjust their spreaders to distribute the right amount of material per acre. However, only exceptional operators seriously consider and analyze the factors which can cause more material to be delivered to one side of the swath than to the other, how far the material may be thrown to one side, and variations in swath width.

The purposes of this publication are (1) to describe types of spreading equipment currently in use and how they work, (2) to discuss the measurement of distribution patterns produced by these spreaders, (3) to discuss some of the factors which cause nonuniform distribution of lime and fertilizer and (4) to describe operating procedures which can minimize this very serious problem.

Broadcast Distributors for Lime and Dry Fertilizer

Most farmer-owned distributors for lime and fertilizer are either full-width- hopper, broadcast spreaders or central-hopper, broadcast spreaders. Other similar equipment found on farms include row-crop units for planters and cultivators and grain drill attachments.

Other machines which are used more commonly on a custom, rental or loan basis include trailer-type bulk spreaders, bulk spreader trucks and aircraft spreaders.

Full-width distributors. The simplest spreader is the full-width, gravity- flow type, which is a long V-shaped trough supported by wheels on either end. Fertilizer falls by gravity through holes (gates) cut in the bottom of the trough. Changes in gate size control the rate of application. A rotating, ground-driven agitator crushes lumps of fertilizer and aids in keeping material flowing freely and uniformly through the gates.

The advantages of this type of spreader are:

*Low profile to minimize drift, aid filling and permit operation in low-clearance situations.

*Scatter board which can be used to produce a uniform, full-width sheet of fertilizer over the application area.

Disadvantages of the gravity spreader are:

*App1ication rate is not linear with ground speed (greater rates are applied at lower speeds).

*Effective field capacity is low (a 10 foot-unit with 15 cubic foot hopper will cover about four

acres per hour).

*Maneuverability around objects is poor.

Central-hopper broadcast spreaders. The most commonly used spreader is available in a variety of sizes, hopper materials and configurations. Units available are hitch mounted, pull-type or truck mounted, with capacities ranging from 50 pounds to nine tons. Steel, stainless steel, epoxy-coated steel, fiber- glass, polyester and polyethylene are hopper materials.

Most of these spreaders use single or dual centrifugal spinners to throw fertilizer particles over the land surface. Others use high speed belts, blowers or oscillating pendulums as distributors. Truck mounted units use spinners or booms for distribution. The booms utilize drag chains, belts or augers in conjunction with adjustable cut-off gates to release fertilizer the entire length of the boom.

Materials are metered from the hopper to the distributor by use of drag chain, belt or simple gravity-flow openings.

Because of their wide-spread use, the remainder of this publication will concentrate on spinner-type spreaders.

The primary advantages of spinner spreaders include:

*Swath widths up to 60 feet are possible.

*Typica1 effective field capacities approach 15 acres per hour.

*Swath width can be varied.

*Direction of distribution can be controlled (right, left, both sides or full spread).

*Materia1s can be placed up or down slopes, under fences, under and around trees.

Problems of spinner spreaders include:

*Uneven distribution patterns.

*Lack of operator understanding of calibration and adjustment procedures

*Materia1 drift.

*Heavy weight of equipment and fertilizer must be offset by flotation tires, dual wheels or tandem axles.

*Higher initial cost.

The Distribution Pattern

The simple objective when broadcast spreading lime and fertilizer is to distribute the proper amount of material uniformly over the soil or crop surface. As a first step in determining the distribution pattern, it is necessary to calibrate the unit to determine how much of the material is actually being delivered. Although manufacturers always give directions for equipment settings for different materials and rates of application, the only sure way is to measure the amount being metered from the hopper in a given

amount of time or as a known area is covered. The actual fertilizer material should be used in the tests. If a different material is used, a new test should be made. A suggested calibration method would be as follows:

1. Attach a tub or other convenient receptacle under the delivery chute. On some spreaders the spinner(s) are easily detached. On others the spinner may remain mounted but disengaged by removing the drive chain.

2. Measure and mark a 200-foot course in the field to be fertilized. Drive the spreader over the course with the unloading conveyor engaged. Use the same gear and forward speed which will be used when actual application takes place.

3. Remove and weigh contents of the tub. To convert the pounds of fertilizer collected to pounds per acre, multiply the pounds collected by the appropriate number shown in the accompanying table.

Swath Spacing Feet	Multiply pounds collected in 200 feet by
18	12.10
20	10.89
22	9.90
24	9.08
26	8.38
28	7.78
30	7.26
32	6.81
34	6.41
36	6.05
38	5.73
40	5.45
42	5.19
44	4.95
46	4.73
48	4.54
50	4.36
52	4.19
54	4.03
56	3.89
58	3.76
60	3.63

These multipliers come from the following formula.

$$\text{Pounds per acre} = \frac{\text{(Pounds collected) (43,560 square feet per acre)}}{\text{(Swath spacing in feet) (Length of test run in feet)}}$$

If the spreader is operated at normal speeds and the fertilizer used in calibration is the same being spread, the results will be a positive guide for the adjustment needed to reach the desired delivery rate. If calibration shows that an inadequate amount of material is being delivered, one or more of the following adjustments can be made:

*increase the feed gate opening.

*increase speed of the metering device.

*lower the ground speed.

Obviously, if excessive amounts of fertilizer or lime are being applied, the adjustments would be the reverse of those described above.

Once it is known that the correct quantity of material is being applied, the uniformity of the distribution pattern across the swath must be assessed.

The uniformity of a field pattern depends upon the location of the spread pattern center line and the uniformity of the spread pattern itself. The traditional method for evaluating a field machine uses a series of pallet boxes or trays placed on the ground in a line perpendicular to the direction of travel (Figure 3). One or more passes of the spreader in the same direction deposits material in the trays. A plot of the material weight from each tray versus the location of the tray gives a visual picture of the distribution pattern. Kits available for this test include a set of plastic or glass cylinders (or test tubes). Material from the trays is poured into the tubes in order, and the height of fertilizer in the tubes assists in visualizing the spread pattern (Figure 4).

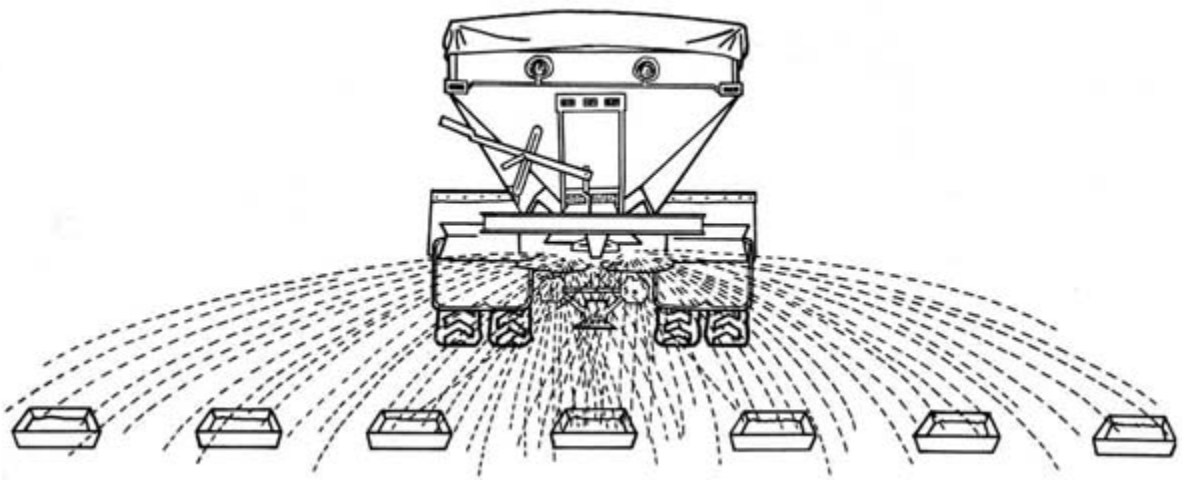

Figure 3. The tray system for evaluating spreader distribution pattern.

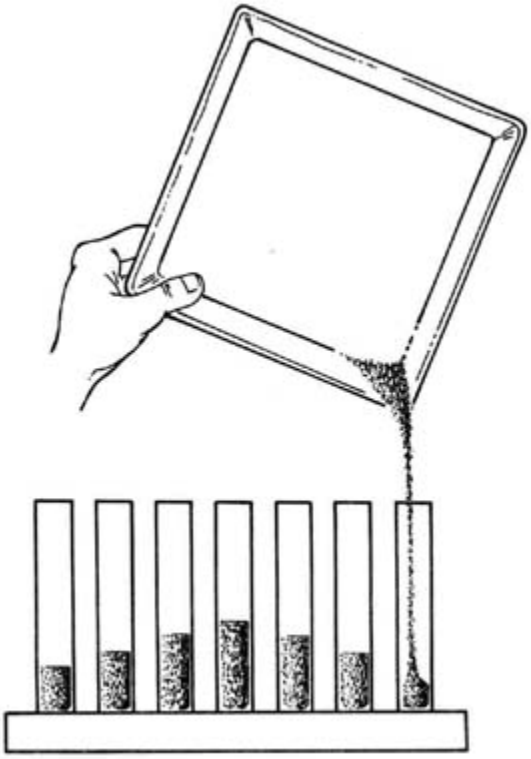

Figure 4. The spread pattern is easily seen when the trays are emptied into tubes.

Theoretically the ideal distribution pattern for a broadcast spreader is shown in Figure 5. The visual picture is a flattopped, trapezoidal pattern with uniform sloping sides. Since there are equal amounts of material on each side of the spreader center line, subsequent passes of the equipment would overlap adjacent spread patterns halfway up each respective side of the graph.

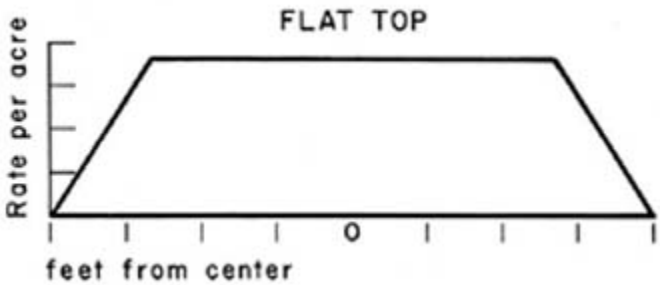

Figure 5. The ideal fertilizer spread pattern.

Most broadcast spreaders actually produce a distribution pattern as shown in Figure 6. The oval that results produces a rather large span in the center of the pattern where the material is uniformly distributed, but this drops off at the ends of the swath. Effective coverage with this pattern is about 60 percent; that is, about 20 percent of the swath width must be overlapped in subsequent passes in order to produce uniform distribution. For example, an oval pattern 40 feet in width would have an effective width of 24 feet. Overlap of eight feet would be required in subsequent passes.

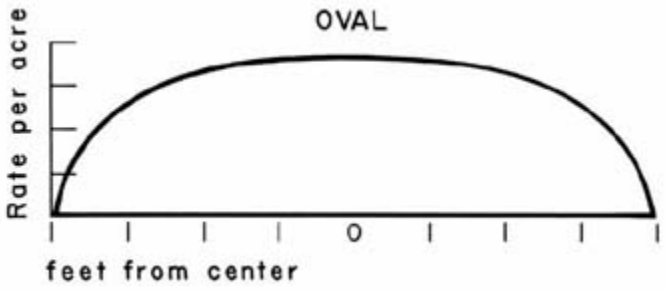

Figure 6. The normal fertilizer spread pattern.

A large number of spreaders produce the pyramid pattern indicated in Figure 7. Although this is an acceptable pattern, the effective swath width is only 50 percent of the theoretical. For example, instead of 40-foot swath center spacings, 20 feet is the maximum possible for uniform distribution. The result is reduced field efficiency (greater time required per acre).

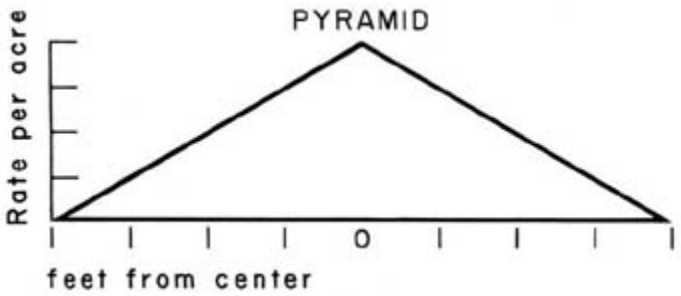

Figure 7. An acceptable fertilizer spread pattern.

Poor Spreader Patterns

Poor spreader patterns can result from numerous reasons. Some causes are: a malfunctioning spreader, inexperienced operator, incorrect swath width due to too little or too much overlap, excessive wind movement, segregation of fertilizer particles, moisture content of the material being spread, slope of the land, incorrect ground speed synchronized with discharge rate, driving pattern not adapted to the shape of the field, or poor field conditions such as tall crop growth or rough, uneven terrain. Three examples of poor distribution patterns are shown in Figure 8.

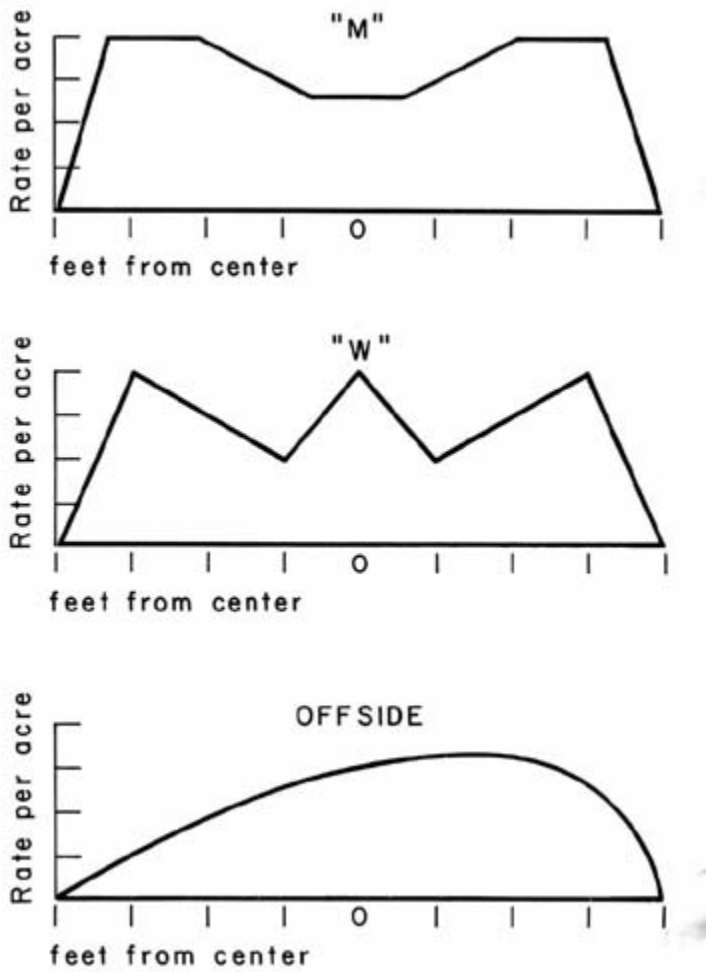

Figure 8. The three major problem-type spreader patterns.

The most common problem is the offside pattern with an excessive material placed on one side of the center line. Another problem is the "W" pattern with three areas of high material concentration. The "M" pattern produces too little fertilizer or lime directly behind the applicator machine. The "W" and "M" patterns are usually associated with twin-spinner spreaders. Many times the "M" and "W" are also offside, which complicates correct..ion of the probleirr. Such patterns must be corrected before continuing to apply fertilizer or lime. Overlapping on "M" or "W" patterns only doubles the material, where too much has been spread already.

In order to correct spread patterns, refer to Figure 9. Adjusting the point of fertilizer delivery, blade pitch or spinner speed may be necessary to correct the pattern.

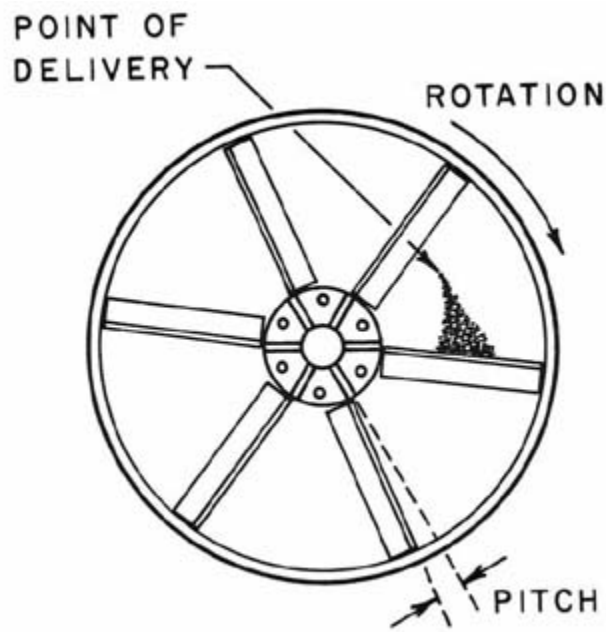

Figure 9. Adjustment of point of fertilizer delivery, blade pitch or spinner speed may be necessary for uniform distribution.

For example, if the right half of the pattern (as viewed from behind and above the spinner) from a clockwise-rotating, single-spinner is heavier than the left half, any of the following adjustments will delay the release of fertilizer from the spinner and correct the pattern:

1. Move the chute to shift the point of delivery in a clockwise direction.

2. Move the point of delivery closer to the center of the spinner.

3. Move blade tips forward in the direction of spinner rotation so that the blades are pitched forward.

4. Decrease spinner speed.

If the left half of the pattern is heavier, make the adjustment in a direction opposite to those indicated.

With twin-spinner distributors, the counter-rotating spinners must start unloading at the proper time to provide uniform coverage directly behind the machine. If application directly behind the spreader is too light, such as with the "M" pattern, earlier release of fertilizer from the spinners will correct the pattern. To do this, make at least one of the following adjustments:

1. Move the chute to shift the points of delivery in a direction opposite to the direction of individual spinner rotation.

2. Shift the points of delivery closer to the periphery of the spinners.

3. Move blade tips back in a direction opposite to the direction of individual spinner rotation.

4. Increase spinner speed.

If the pattern is offside on a twin-spinner, the flow divider must be position- ed to deliver equal amounts of material to each spinner. Spinner spreaders work best when the hopper discharge chute extends down near the spinner.

Even with proper adjustment, not all dry blends of fertilizer materials can be uniformly distributed across the swath. For uniform distribution without segregation of the ingredient materials, it is important that particle size and density of materials be closely matched. Because the action of the distributor is conducive to segregation, this precaution should be observed regardless of whether the materials are blended by a stationary bulk blender or a compartmented blending truck.

Skilled Operators

Any operator must know the effective swath width covered by his spreader before he can drive accurately and space swaths correctly in the field. The skilled operator measures the effective swath width covered by the spreader and knows what spacing to use. Some operators guess and frequently use incorrect spacings. Use of the tray system makes it possible to know just how far the material is being spread. Since swath width tends to increase with higher spinner speeds, it is important that checks be made with the spinner operating at field speed.

Safety Precautions When Handling Fertilizers

Dry fertilizer is hygroscopic -- it attracts moisture. It can draw water out of skin and leave it red and sore. These skin burns are usually a minor discomfort, but they can be painful to people with sensitive skin. Dry fertilizer can also get into and irritate the mouth, nose and eyes. The scalp is another area that is often very sensitive to the effects of dry fertilizer.

Prevent fertilizer burns by keeping the dust away from skin. Wear a long- sleeved shirt buttoned at the collar and a cap or hat to keep dust out of your hair. Change clothes daily -- more often if they pick up a lot of dust. Wash your face, hands, arms and other exposed skin several times a day with soap and water. Do not allow the fertilizer to stay in contact with skin. Wear gloves while in contact with these chemicals.

When handling the materials, let the wind blow dust away. Stand upwind when filling hoppers. Drive crosswind in the field, if possible, so dust is blown off to one side. If dust is a problem, wear goggles to protect your eyes and a filtered respirator to protect your lungs.

Centrifugal broadcast spreaders throw fertilizer particles at high speeds. These particles can be painful and can get into eyes, ears or mouth. Stay away from the back of the machine when the spreader is operating.

If the spreader plugs, stop the machine and shut off the engine before doing any inspection or maintenance.

Use a safe speed when pulling loaded spreaders. They are heavy. Excessive speed can cause the unit to veer out of control while going downhill or around corners. These spreaders are not normally equipped with brakes, so only the tractor brakes are available for stopping. Use a safety chain when towing the spreader on the highway. Also, display the SMV (slow moving vehicle) emblem as required by law.

Fertilizer equipment is often cleaned with diesel fuel. The fumes can ignite and burn. Always work outdoors or in a well-ventilated area, and stay away from flames. Do not allow smoking in the area.

Summary

It is difficult to obtain fully uniform application of fertilizer and lime. The most uniform application can be obtained by evaluating the distribution pattern produced by the spreader under normal operating conditions; that is, by using the actual fertilizer, in the field in which the material is to be applied and

using the proper rate of application, gears and ground speed. The equipment must be properly calibrated and maintained. Operators of the equipment must understand the factors that affect the distribution patterns and the equipment adjustments that will produce the best possible results. The operators must be willing to spend some time to attain the desired pattern. The result will be maximum returns for the lime and fertilizer dollar. The time spent calibrating and adjusting fertilizer and lime spreaders before they are used each season could easily become the best paying job on the farm.

Uniform Lime and Fertilizer Spreading

by

Larry Stewart, V. Allen Bandel
Agricultural Engineering
Agronomy

Issued in furtherance of Cooperative Extension work, acts of May 8 and June 30, 1914, in cooperation with the U.S. Department of Agriculture, University of Maryland, College Park, and local governments, Thomas A. Fretz, Director of Maryland Cooperative Extension, University of Maryland.

The University of Maryland is equal opportunity. The University's policies, programs, and activities are in conformance with pertinent Federal and State laws and regulations on nondiscrimination regarding race, color, religion, age, national origin, gender, sexual orientation, marital or parental status, or disability. Inquiries regarding compliance with Title VI of the Civil Rights Act of 1964, as amended; Title IX of the Education Amendments; Section 504 of the Rehabilitation Act of 1973; and the Americans With Disabilities Act of 1990; or related legal requirements should be directed to the Director of Human Resources Management, Office of the Dean, College of Agriculture and Natural Resources, Symons Hall, College Park, MD 20742.

2002